EKATO. THE BOOK

The contributions on the different aspects of mixing technology were written by Ekato specialists. They combine the knowledge and know how gathered by Ekato from research, development, application, construction, manufacturing and marketing.

Although the utmost care has been taken when compiling and checking this publication, the publisher is not responsible or liable for errors or omissions. We reserve the right to make technical changes.

Illustrations, descriptions, schematic diagrams and other data serve exclusively for explanatory purposes and presentation of the text. They may not be used as a template or as a confirmation of tests. The publisher disclaims all responsibility and liability for compliance of the content of this publication with local, national or international laws, rules or regulations.

3rd Edition
ISBN No. 978-3-00-038660-2

Publisher:
Ekato Holding GmbH
Postfach 10 70
D-79010 Freiburg (Germany)

info@ekato.com
www.ekato.com

Editor: Werner Himmelsbach
Editorial services: Dr. Matthias Delbrück, Dossenheim (Germany)
Translation: itl Institut für technische Literatur AG, München (Germany), Gillian Scheibelein
Concept and design:
qu-int. | marken | medien | kommunikation, Freiburg (Germany)
Printed by: Druckerei Hofmann, Emmendingen (Germany)

The conventional basic operations used in chemical, thermal and mechanical process engineering, to which mixing and blending technology also belongs, continue to be the backbone of the process industry. New technologies, e.g. micro process engineering, will supplement and enhance them, but will certainly not substitute them. In fact, quite the reverse: these "mature" basic operations are currently experiencing a developmental spurt that is driven by industrial demands for greater profitability and resource efficiency. This represents a challenge, not only for plant operators and manufacturers of machines, apparatus and instruments, but also for academic research, which is once again faced with a rewarding field to deepen our understanding of the physical and chemical processes taking place inside mixing vessels. This applies to an even greater extent to future-oriented applications with new equipment concepts, such as the manufacture of nanodispersions, for which practical experience is still in its infancy. Furthermore, the underlying theoretical principles are still not completely understood.

The third edition of the Handbook of Mixing Technology first deals with the physical and rheological principles of mixing technology and blending of solids as well as design concepts for mixing and dispersing equipment. This is followed by the mixing systems themselves, including descriptions of the individual components, and progressing to the full production plant. In addition to the classical design methods, the discussions include methods based on computational fluid dynamics and also numerical structural analysis of all components. Topics covered range from the equipment concept to reliable and maintenance-friendly operation. The third section gives examples of process solutions that are being used in all sorts of different industrial sectors. As a consequence, this Handbook of Mixing Technology is aimed at students as well as process developers, plant engineers and production designers in the process industry.

The contributions to this third edition were written by specialists from the different sectors of the EKATO GROUP. We are very grateful for their exceptional commitment.

We hope that this new edition will be received with the same enthusiasm as its two predecessors and that it will contribute to the understanding of this important basic operation.

Schopfheim, June 2012

Dr. Erich K. Todtenhaupt *Dr. Christian Watzelt*

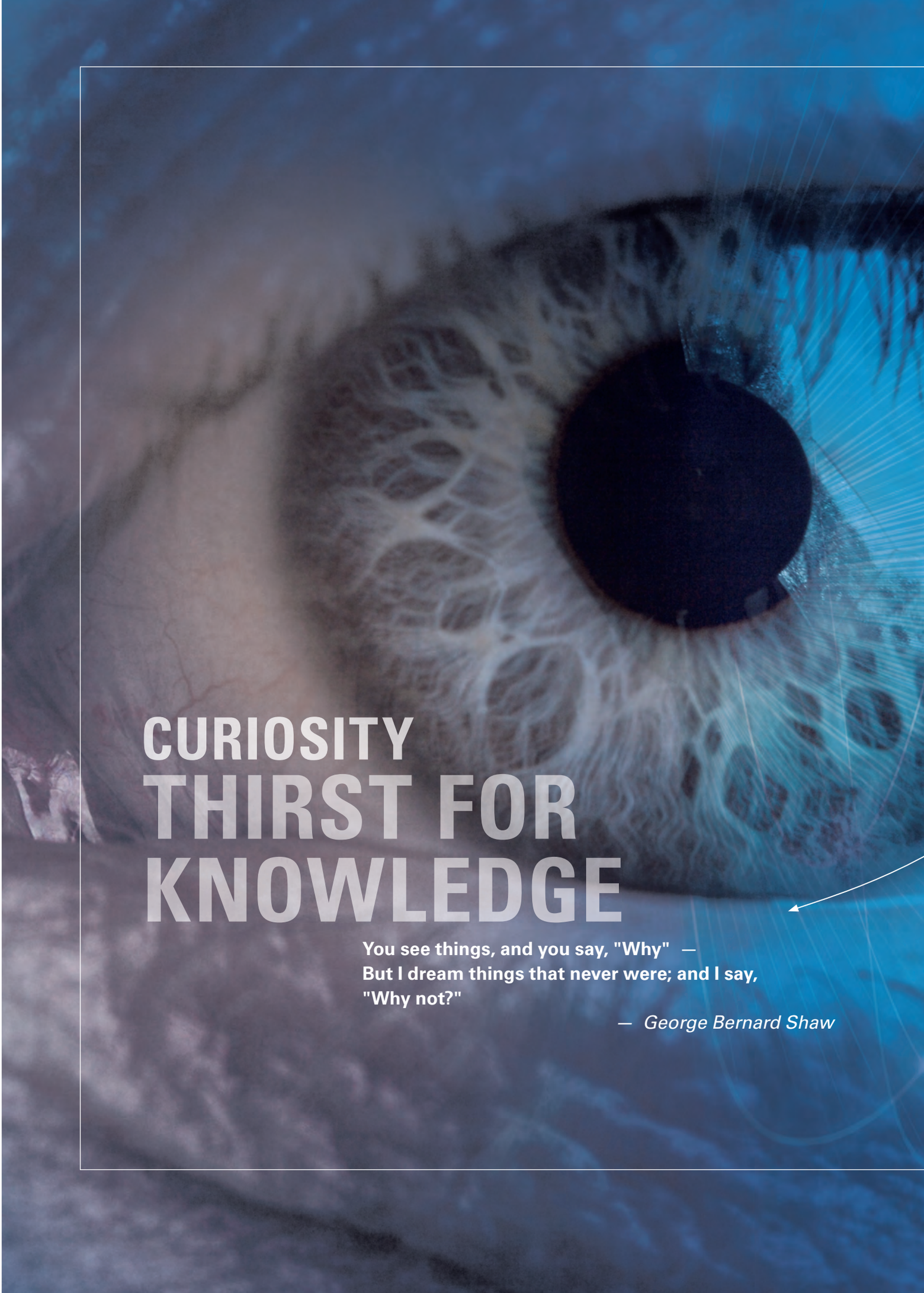

CURIOSITY
THIRST FOR KNOWLEDGE

You see things, and you say, "Why" —
But I dream things that never were; and I say,
"Why not?"

— *George Bernard Shaw*

The processes taking place in a mixing or blending vessel are very complex and are based on the laws of fluid mechanics and bulk material mechanics. The three-dimensional flow generated by the impellers interacts with the vessel itself and its internal fittings. The classical laws of fluid mechanics, particularly the conservation laws for mass, energy and momentum as well as the descriptions of internal friction, turbulence phenomena and special rheological features are sufficient to characterise and analyse the flow dynamics.

The actual purpose of mixing is to achieve a process result that is based on very diverse physical and chemical phenomena that have their own mechanisms and kinetics. Liquid, gaseous or solid reaction partners must be dissolved and homogenized down to the molecular level. Crystallizing solids must be kept suspended and their growth controlled. The flow turbulence is exploited to produce dispersions or stable emulsions. Most process steps require either the input or removal of heat via the vessel wall or internal internal heat exchangers or by evaporation or condensation of process media.

The complex interplay between these factors means that many of the individual steps are difficult to understand. They are thus classified systematically into the various basic mixing tasks, and their interactions with the flow generated by the agitator and with the individual chemical and physical process steps are analysed. Knowledge and understanding of the parameters relevant to success then enable systematic planning of tests or simulations and is the basis for subsequent scaling up to production scale.

THE SCIENCE

FUNDAMENTALS

A suspending agitator can be used for various purposes. For example, an off-bottom suspension may be sufficient for washing processes or dissolving solids, whereas a continuously operated cascade of stirred tanks e.g. for crystallisation or for ore leaching, may impose the highest requirements regarding the homogeneity of the suspension.

STATES OF SUSPENSION

Depending on the power input or the selected impeller, there are different states of suspension or homogeneities of solids over the height of the liquid in the vessel. In an off-bottom or partial suspension (Fig. 23, left), the particles are lifted and suspended by the surrounding flow; however, some of the solid remains on the bottom. A complete suspension is obtained when all the solid has left the bottom of the vessel i.e. Zwietering's [152] 1s-criterion is fulfilled. This means that the entire surface of the particle is accessible and thus available for mass transfer processes. A further increase in the agitator speed improves the degree of suspension over the entire height of the liquid until a theoretically homogeneous suspension is reached.

The homogeneity of a suspension is generally characterised by means of the standard deviation σ of the solids concentration along the vertical axis and is defined as follows

$$\sigma = \sqrt{\frac{1}{n} \cdot \sum_{i=1}^{n} \left(\frac{c_{\mathrm{V},\,i}}{\overline{c}_{\mathrm{V}}} - 1 \right)^2} \qquad (32)$$

Achieving a standard deviation of 0.5 is sufficient to satisfy most suspending tasks: there are no deposits on

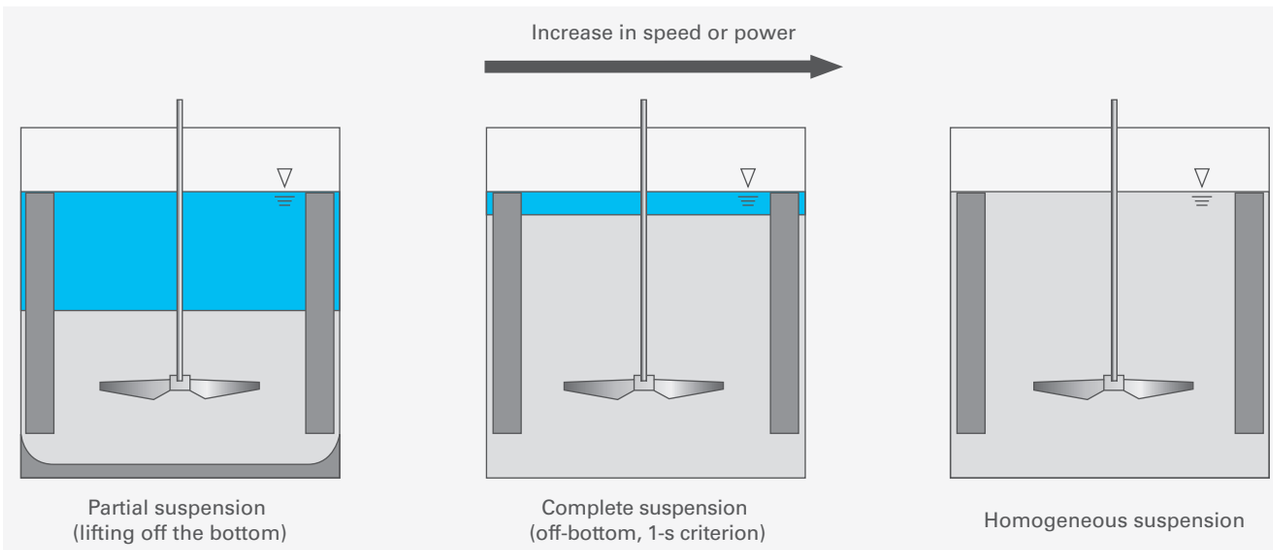

Fig. 23 Different types of suspended states as a function of the rotation speed

the bottom and the solids reach the surface of the liquid; however, there may be localised areas with higher concentrations that can be up to 1.5 times the mean value.

In a continuously operated cascade of mixing vessels, much higher degrees of homogeneity are necessary to ensure that the material can flow without interference. The density of the suspension at the surface of the liquid must be similar to that close to the bottom.

DESIGN FUNDAMENTALS

CHARACTERISING THE MATERIAL SYSTEM

The material data to be taken into consideration in the design of suspending agitators are:

- density of the pure liquid
- difference in density between the solid and the liquid
- viscosity of the liquid
- particle size
- solids concentration

These factors are all included in the hindered settling velocity w_{ss} of the particle swarm.

The settling velocity of a single particle w_s can be calculated using the methods given in the relevant literature. The hindering effect on the settling process due to the presence of several particles is quantified by the following relation:

$$w_{ss} = w_s \left(1 - c_v\right)^m \tag{33}$$

According to the empirical approach of Zaki [104], the exponent m is a function of the particle Reynolds number

$$Re_p = \frac{d_p \cdot w_s \cdot \rho}{\eta} \tag{34}$$

It lies in the range from $0.5 \leq Re_p \leq 1300$ and is given by

$$m = 4{,}375 \cdot Re_p^{-0{,}0875} \tag{35}$$

and thus takes values between 4.65 and 2.33.

ENERGETIC CONSIDERATIONS

If it is assumed that all solid particles in the liquid are already uniformly distributed and all simultaneously start to settle under the effect of gravity, they release a "settling power", which can be quantified by the relation:

$$P_{settle} = w_{ss} \cdot c_v \cdot \Delta\rho \cdot g \cdot V \tag{36}$$

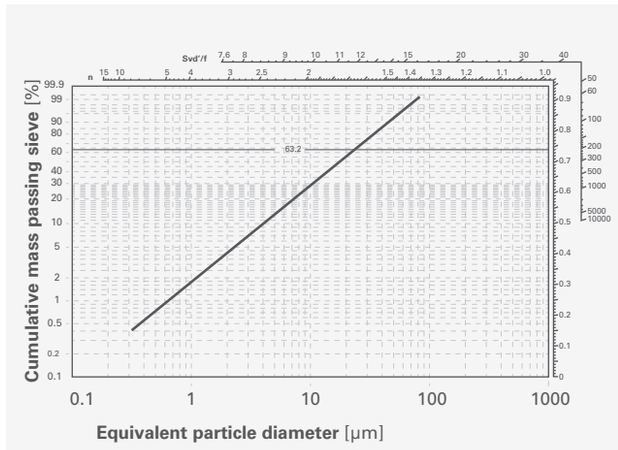

Fig. 24 Typical particle size distribution in a RRS diagram

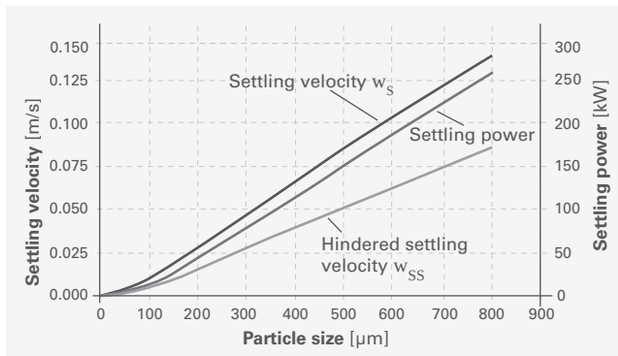

Fig. 25 Settling velocities and settling power as a function of the particle size

In order to maintain a defined degree of uniformity in the suspension, the agitator must transfer sufficient power into the liquid to counteract the settling power. This agitator power is always a multiple of the settling power. The additional power required to circulate the liquid can be neglected for most technical applications.

Because the settling power and thus the agitator power are proportional to the hindered settling velocity, choosing the design particle size is very important.

Granular materials always consist of many individual particles with different sizes and shapes owing to their origin, e.g. grinding. The particle size distribution is usually a straight line in a RRS diagram. For a typical particle size distribution, as shown in Fig. 24, the values shown in Fig. 25 for the settling velocity and settling power for a specified vessel volume are derived ($\Delta\rho = 2000\ \mathrm{kg/m^3}$).

In simple terms, an agitator is a machine that consists of two main components: the impeller, which is responsible for the process outcome, and the drive train, which provides the power for the impeller. Processes are usually carried out in a closed vessel, and the hermetic seal between the process area and the environment is provided by a sealing system.

The long-standing trend towards simple, all-purpose impellers has now been superseded by individually designed impellers that have been optimised with respect to their hydraulic efficiency and which are frequently tailored to the requirements of particular processing steps or boundary conditions. Understanding the characteristics of this wide range of different types leads to faster process workflows, better utilisation of raw materials, higher product qualities and simplified maintenance. All these components increase the operating yield of the equipment.

The individual machine components are exposed to dynamic loads resulting from the process that have a retroactive effect on the entire drive train. A reliable design is primarily based on knowledge of these hydraulic forces, obtained from measurements and flow simulations, and on their accurate scaling to the production size. Furthermore, the impeller, shaft, bearing, gearbox and drive represent a complex system of coupled vibrational elements. Rigorous application of the laws of rotor dynamics and physics of vibrational phenomena can be used to reliably exclude resonance phenomena.

Most processes involve chemically or biologically active components, usually at elevated temperatures and pressures. To exclude hazards for humans, the environment and the inventory, the process area must be reliably sealed at the agitator flange for the rotating agitator shaft during the entire operating period. This elementary task is provided by the mechanical seal. Depending on the risk assessment, these seals range from simple designs to complex sealing systems with monitoring and redundancies for all functions. The reliability of the sealing system is based not only on quality assurance during manufacture, but also on other factors that are just as important, e.g. tailored concepts for monitoring the status of the equipment and for maintenance and spare part management.

THE KNOW-HOW

THE BRIDGE TO THE PROCESS

TRADITIONAL IMPELLERS
HIGH-PERFORMANCE IMPELLERS
SPECIAL DESIGNS
WEAR PROTECTION
PRINCIPLES OF AGITATOR DESIGN
MECHANICAL SEALS

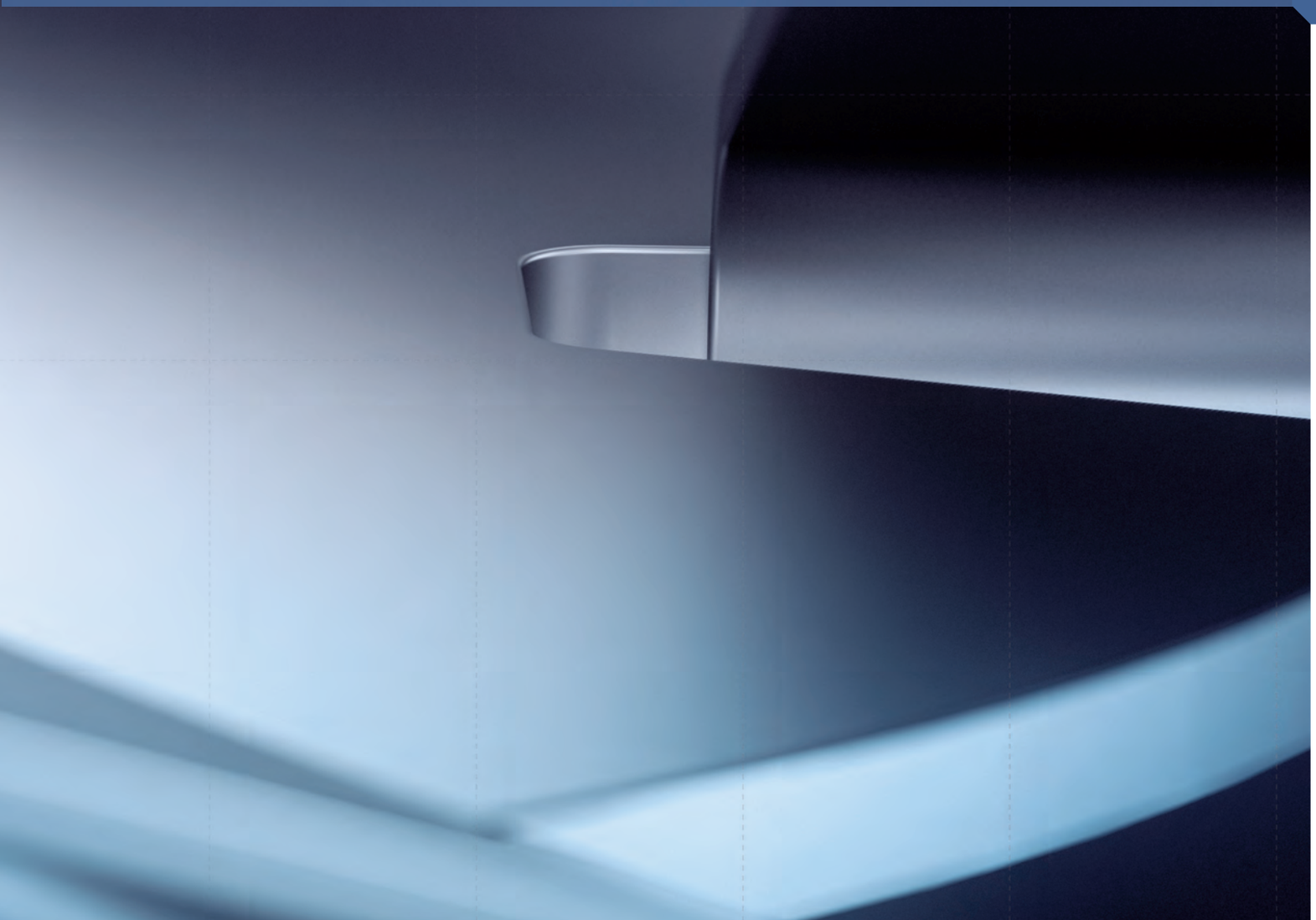

The basic sealing task in mixing applications is to seal the rotating shaft as it passes through the vessel wall. Depending on the operating conditions – pressure, temperature, agitator speed, etc. – different types of seals are used. Their specific characteristics are discussed in this chapter.

RADIAL AND AXIAL SHAFT SEALS

Shaft seals can be divided into 2 main groups: radial and axial seals (see Fig. 141). The main difference between these two principles is the direction in which the contact forces are acting.

In a radial shaft seal, the sealing effect is provided by radial forces and the length of the cylindrical sealing gap is in the axial direction. Although radial seals are relatively insensitive to axial displacements, radial shaft deflections lead to higher sealing forces on one side, which may cause leakages and accelerate wear. Typical types of radial shaft seals include radial sealing rings, lip seals and stuffing boxes.

In contrast, the sealing forces in axial shaft seals act in the axial direction. This results in a horizontal sealing surface with a concentric circular cross-section. Owing to their design, axial shaft seals are relatively insensitive towards radial shaft deflections and are thus very suitable for agitator applications. Axial displacements have to be compensated with elastic elements. Mechanical seals belong to the group of axial shaft seals.

STUFFING BOXES

Historically, stuffing box packings are the oldest type of sealing element. The term "stuffing box" originates from early steam ship construction. The passage for the shaft through the hull was sealed with oil-soaked rags that were stuffed into the gap between the shaft tube and the housing [134].

The first mixing vessels were often equipped with a stuffing box.

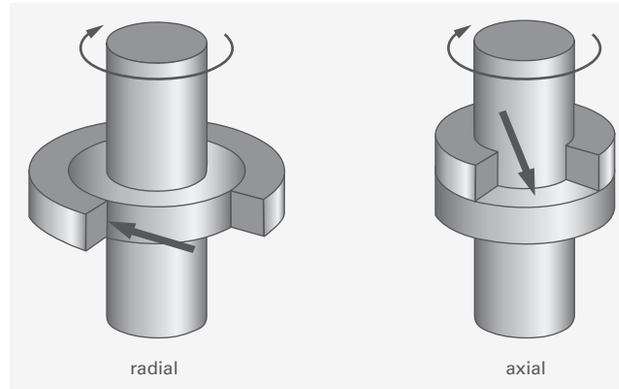

Fig. 141 Radial and axial shaft seals

However, from the 1950s these were gradually replaced by mechanical seals and are only very rarely used nowadays. Increasingly stringent legal environmental requirements, e.g. by the German TA Luft (Technical Instructions for Air Quality Control) [27] and ongoing cuts in maintenance personnel at the operating companies will probably lead to the complete disappearance of these seals from industrial chemical plants in the future.

The main drawback of using a stuffing box to seal a mixing vessel is that attrition of the packing rings leaves a gap between the agitator shaft and the packing, thus compromising the sealing efficiency due to transformation of the compact packing to a labyrinth-like structure. The sealing effect mainly depends on how often the operating personnel re-tighten the gland. It is impossible to give any reliable information on the expected leakage rates.

Comprehensive information on the materials, operating conditions, coefficients of friction as well as special designs is given in [134].

LIP SEALS

In mixing applications, the working principle of lip seals can be in either the radial or the axial direction.

Cup collars, which provide axial sealing, can be shifted to different positions along the shaft. Although, the lip of the cup collar running along the mounting flange surface can only be used to seal vessels operating under atmospheric pressure, they can protect the surroundings of the agitator against steam, vapours, etc.

Radially acting lips – usually made of a modified PTFE material – are also used to seal mixing vessels. These shaft lip seals, however, must be equipped with relatively complicated bearings to limit shaft deflections within the seal housing to about 0.01 mm. This is the only way to operate the lips reliably at pressures of up to 6 bar.

HERMETIC SEALS

In order to hermetically seal a mixing vessel using only static seals, the the mechanical energy required at the impellers must be transmitted through the wall of the closed vessel. As shown in Fig. 142, the input torque of a magnetic drive is transmitted to the shaft through a canister using permanent magnets.

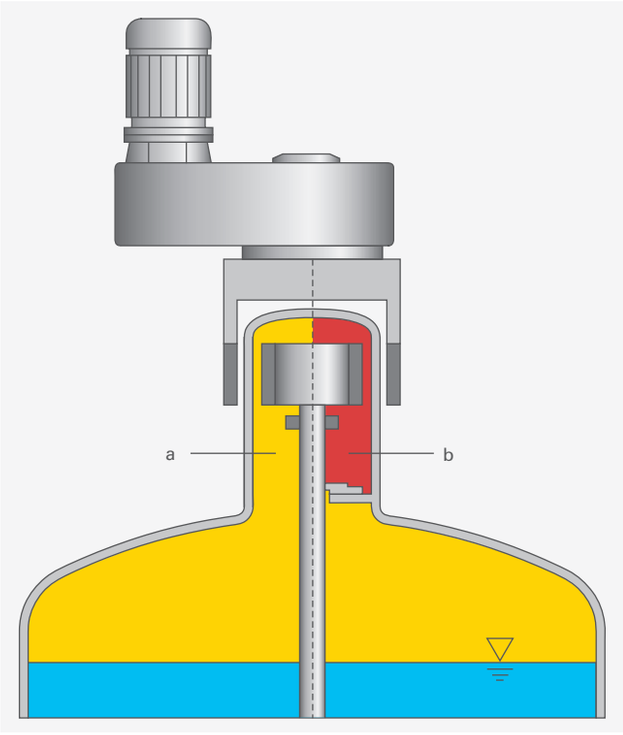

Fig. 142 Hermetic agitator seal

Magnetic drives have long been the standard in pumps exposed to chemicals.

Since the canister is permanently attached to the mixing vessel, the agitator bearing is located inside the product area. A standard rolling bearing with grease lubrication is thus completely unsuitable. There are two main solutions to implement a bearing within the head-space of the vessel:

- use of ceramic bearings, e.g. zirconium oxide (Fig. 142 a) or
- separating the bearing chamber from the vessel chamber with a mechanical seal so that a standard oil-lubricated rolling bearing can be used (Fig. 142 b).

Ekato favours the second solution using the mechanical seal and oil in the bearing chamber because the additional separating seal also protects the internal magnet against aggressive products. In addition, the lubricating oil of this seal can also be used for cooling and monitoring purposes. If the mineral oil is not compatible with the product, the unavoidable leakage through the mechanical seal into the product area (several ml/day) can be trapped with a collector tray and then discharged.

MECHANICAL SEALS

The term "hermetic" is used for sealing systems that use only static sealing elements as a safety barrier. In contrast, mechanical seals with dynamic sealing elements are regarded as technically tight ([27], [179]) when pressurization of the seal liquid is able to maintain a positive pressure gradient between the seal liquid chamber of the mechanical seal and the product in the vessel.

Mechanical seals are first mentioned in US patent specifications from 1913 and 1919 [134]. However, mechanical seals were first used in agitator applications in the 1950s. Ekato was one of the first companies to use mechanical seals in agitators and is still manufacturing their own models.

Most mechanical seals used in agitators consist of 2 rotating and 2 stationary seal rings, i.e. 2 pairs of seal rings (Fig. 143). These pairs of seal rings form an enclosed space – the seal chamber – that can be filled with seal liquid. The contents of the vessel can be reliably sealed against the surroundings by applying pressure to the seal liquid. If the seal chamber pressure is controlled so that it is always higher than that inside the vessel, the unavoidable leakage of seal liquid past the inboard seal rings can only enter the vessel or, if it passes the outboard pair of seal

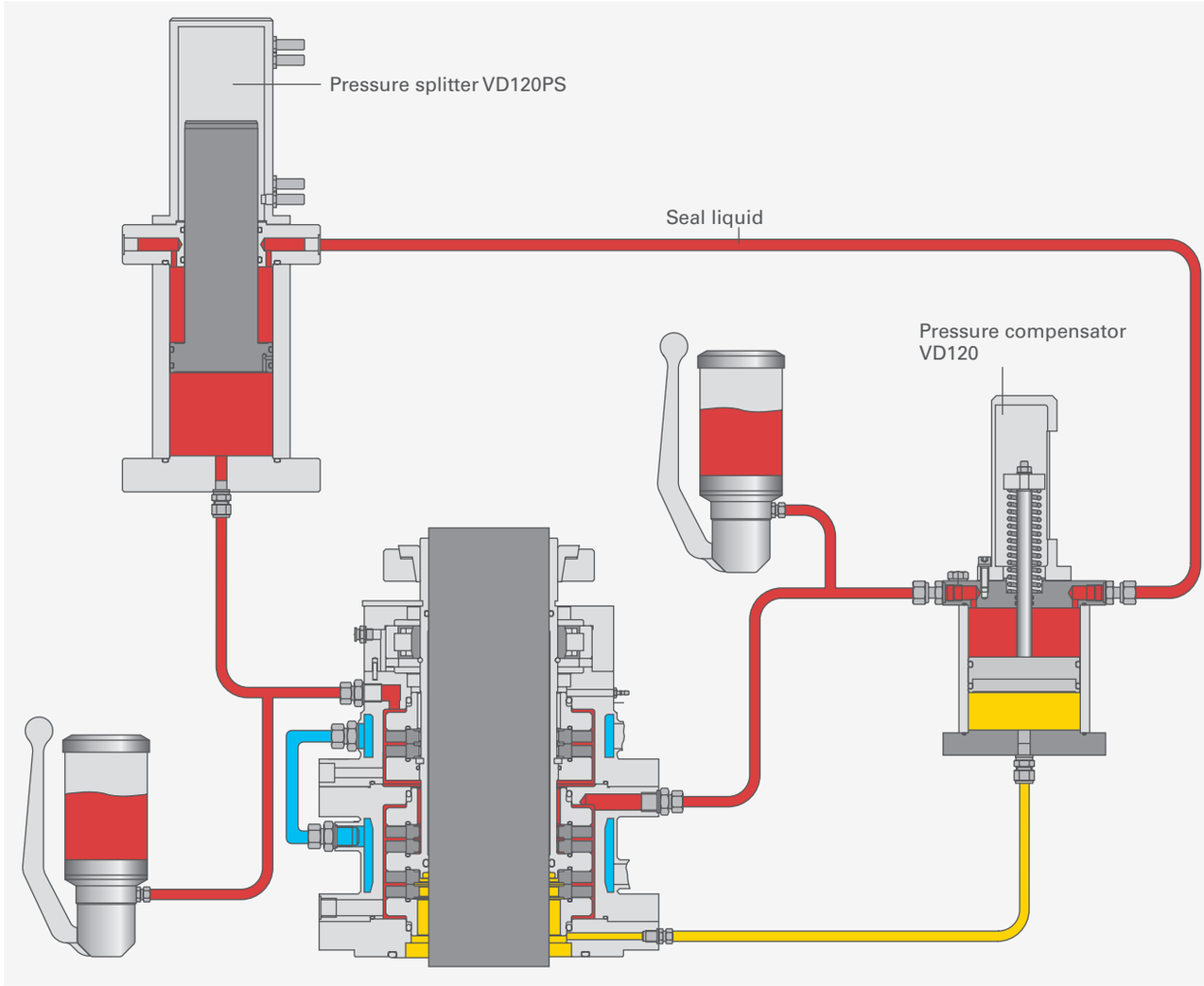

Fig. 156 Triple-acting mechanical seal with pressure splitter installation

2. The mechanical seal is operated with a pressure splitter (Fig. 156) which uses a specially designed pressure compensator that maintains the pressure in the upper seal chamber at half the value of that in the lower chamber. This enables the vessel to be operated at twice the pressure compared to a double-acting mechanical seal because the pressure is distributed over two seals. This allows sealing of vessel pressures up to 200 bar.

3. For vessel pressures up to 200 bar, triple-acting mechanical seals are equipped with special supply systems that continuously replenish the seal liquid lost during operation.

MECHANICAL SEAL SYSTEMS

Mechanical seals are generally regarded as mechanical engineering components, and are used e.g. in pumps as a sealing component.

The situation is somewhat different in processes and applications of mixing technology. In these cases, the mechanical seal is generally implemented as a "unit" that can be exchanged. These are referred to as "cartridges". Whereas single-acting mechanical seals still have a component character, double- and triple-acting mechanical seals are regarded as mechanical seal systems owing to their complexity.

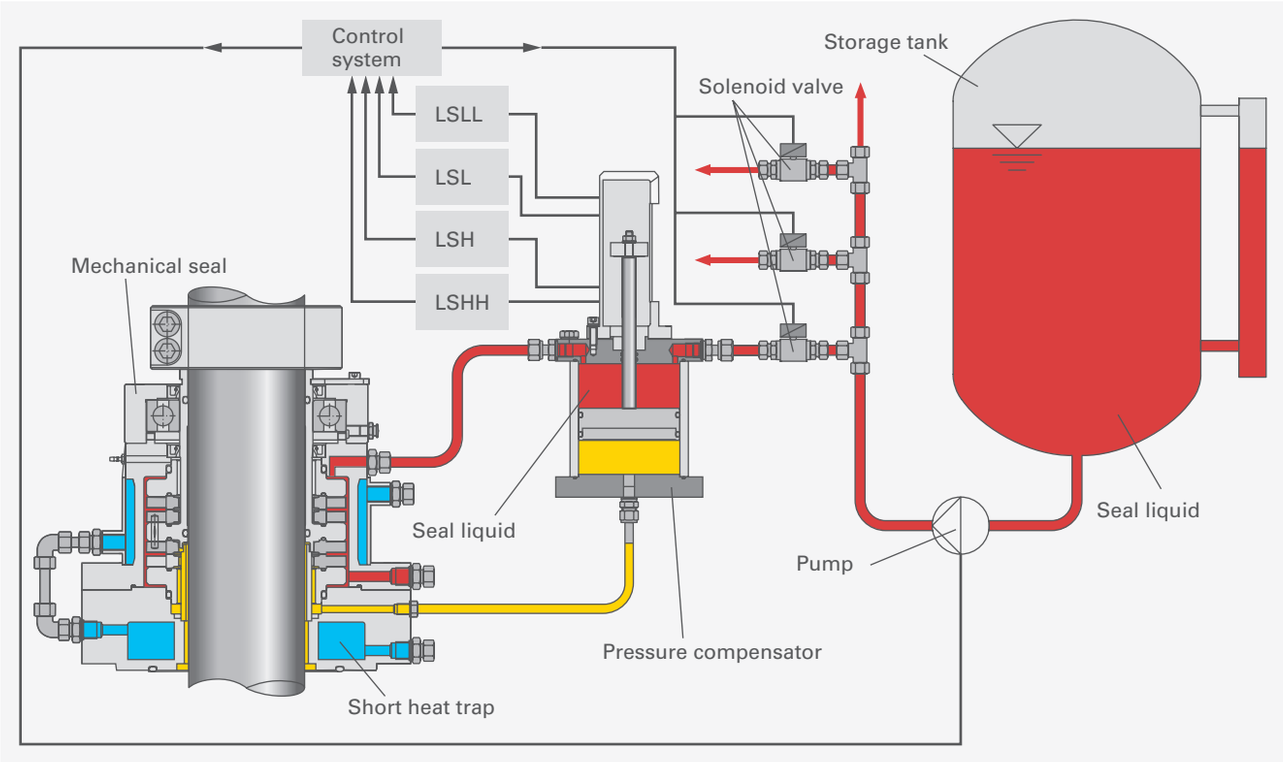

Fig. 157 Mechanical seal system

A mechanical seal system, as shown in Fig. 157, consists of the mechanical seal cartridge, the hydraulic components (e.g. pressure compensator) and the "installation", which comprises the pipework, instrumentation and mountings. In some cases, this also includes a seal liquid refilling system, as shown in Fig. 157. As a consequence, in most mixing systems, only the complete mechanical sealing system can provide reliable sealing of the vessel. Careful selection of suitable hydraulics and installation components is just as important as the reliable design of the mechanical seal itself. The sealing function of the vessel can only be guaranteed and maintained if the mechanical sealing system has been correctly selected.

SUPPLY SYSTEMS

Supply systems ensure safe and reliable operation of the mechanical seal. A seal is regarded as being technically sealed ([27], [134]) when the pressure in the seal chamber is always higher than the vessel pressure (compare the pressures in Fig. 158, bottom). The supply of seal liquid (Fig. 158, top) is thus of primary importance to safety. The seal liquid also lubricates the seal interface.

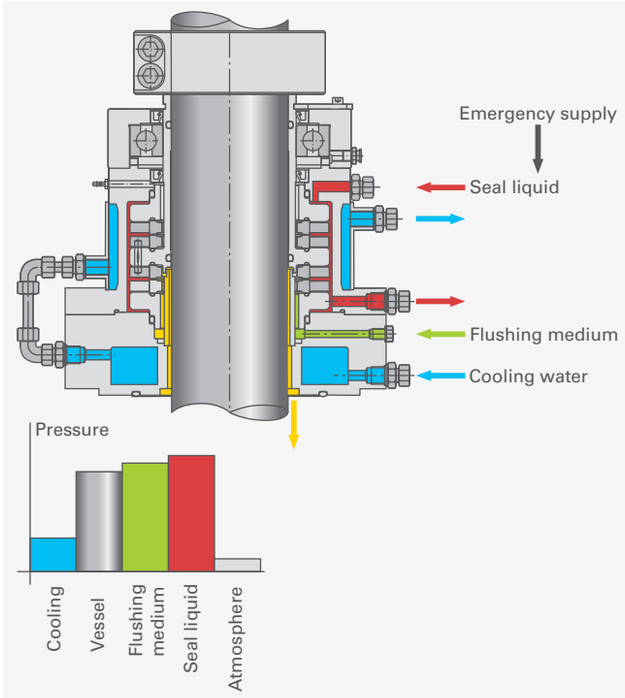

Fig. 158 Supply systems; top: interfaces to the mechanical seal; bottom: pressures in the system components

Even if process unit operations appear to be fully developed, new products and product groups, new types of raw materials and synthesis routes or integration of biological processes continue to present demanding challenges for chemical engineers.

Bulk chemicals and polymers based on crude oil are still being produced by established and globally licensed processes. Modern mixing technology can be used to optimise production and to improve resource efficiency and economic viability.

Integration of biological processes into chemical methods is gaining impetus. Classical fermenters with high-performance organisms produce complex molecules. The high conversion rates can only be achieved with efficient mixing systems. Degradation of biomass as a raw material for intermediate chemical products used in new synthesis routes is an upcoming technology that is not economically viable without mixing technology.

Processing of ores with environmentally harmful roasting processes is being changed over to new hydrometallurgy methods that depend on mixing technology, e.g. pressure leaching or ore digestion by microorganisms.

The wide range of technical mixing solutions is demonstrated, in particular, by methods used for manufacturing formulated consumer products. The combination of classic emulsification technology with high-pressure processes opens new opportunities in the dynamically developing world of nanoparticles. Drying technology and handling of bulk materials has become simpler with new apparatus concepts. This is also reflected in the ability to validate production outcomes, provided that production follows good manufacturing practice.

Modern process engineering is simply inconceivable without mixing technology. With its ongoing developments and established solutions, the Ekato Group provides a major contribution in this respect.

THE CUSTOMISED SOLUTION

APPLICATIONS

WORLD-SCALE PLANTS
POLYMERS
HYDROMETALLURGY
SPECIALTY CHEMICALS
DRYING
BIOTECHNOLOGY
CRYSTALLIZATION
VISCOUS MEDIA
OINTMENTS, CREAMS
NANOMATERIALS
SECOND-GENERATION BIOETHANOL
LARGE VESSELS, STORAGE TANKS,
SIDE-ENTRY AGITATORS

THE CUSTOMISED SOLUTION

APPLICATIONS

WORLD-SCALE PLANTS
POLYMERS
HYDROMETALLURGY
SPECIALTY CHEMICALS
DRYING
BIOTECHNOLOGY
CRYSTALLIZATION
VISCOUS MEDIA
OINTMENTS, CREAMS
NANOMATERIALS
SECOND-GENERATION BIOETHANOL
LARGE VESSELS, STORAGE TANKS,
SIDE-ENTRY AGITATORS

Polymers are organic chain molecules made of identical building blocks known as monomers. In addition to standard polymers, such as PVC (polyvinyl chloride) and PE (polyethylene), there are special polymers that are tailored to a particular type of application. Industrial polymer products are manufactured using equipment with capacities of up to 500 000 t/a, which is usually operated continuously on account of the high throughputs. Specialities, on the other hand, are synthesised in batches.

PROCESS ENGINEERING

The reaction rate of a polymerization reaction cannot be arbitrarily increased by increasing the temperature because the reactants and end products may decompose. The reaction times are comparatively long, i.e. several hours, so that a flow tube reactor is not suitable. Agitated vessels are usually the best choice for both batch manufacturing as well as continuously operating equipment.

Depending on the desired material properties, the number of monomer molecules in a polymer chain may reach several thousand and the resulting molecular weights can exceed 10 000 g/mol.

A fundamental problem associated with the manufacture of polymers and plastics is heat transfer. At the start of polymerization, heat removal is simple because the initially formed oligomers have a low viscosity owing to their small degree of polymerization.

As the reaction proceeds, the viscosity of the polymers may dramatically increase over time. Viscosities of around 1 000 000 mPa·s at 300 °C are not a rarity. At such high viscosities, barriers to heat and material transport develop and control of these is crucial in order to obtain particular polymer grades.

Reaction type / Reactor type	Bulk polymerisation	Homogeneous solvent polymerization	Suspension polymerisation		Emulsion polymerisation
			Precipitation polymerisation	Pearl polymerisation	
 Batch Fed batch	PVC PMMA Resins	SBR Resins Speciality polymers	HDPE PTFE PPS	SAN PVC EPS PMMA Resins	PVC SAN PA ABS PTFE PVAc HIPS
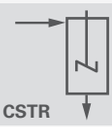 CSTR	LDPE PP PS SAN	HDPE	HDPE PP IIR		PVC
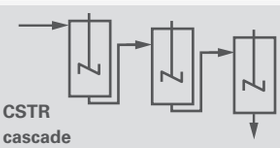 CSTR cascade	HIPS ABS LDPE PET	BR IR EPDM	HDPE PP		SAN SBR CR NBR

Fig. 280 Types of polymerization reactions and operating modes for key bulk polymers (CSTR: continuous stirred-tank reactor)

On the one hand, the heat of reaction cannot be simply dissipated via the vessel wall or heat exchangers because thick boundary layers have formed on the walls and they present a considerable resistance to thermal conduction.

On the other hand, the transport of monomers to the reaction site and the transport of secondary reaction products (e.g. water from polycondensation) away from the reaction site is generally hindered so that either there is a local depletion or undesirable excess of components, thus leading to local shifts of the chemical equilibrium. Reaction engineering strategies have been developed to overcome these difficulties. The most important of which are briefly described below.

Apart from the reactor itself, there are generally a number of other agitated process steps in polymerization plants. These serve e.g. to prepare the monomer and catalyst or to work up the resulting polymer after the reaction, for example to remove solvent or residual monomer. This is discussed in more detail at the end of this section.

BULK POLYMERIZATION

Bulk polymerization starts with a pure monomer without additional solvents. The resulting high yields lead to correspondingly high viscosities in the reactor. These viscosities can be lowered by working at high temperatures so that the medium is (just) capable of being circulated. It is generally not useful to install cooling elements in the reactor because this would lead to deposits on the surfaces.

PRIMARY MIXING TASKS

- Circulation of the entire, highly viscous polymer melt
- Obtaining a high temperature homogeneity

HOMOGENEOUS SOLVENT POLYMERIZATION

In homogeneous solvent polymerization, the viscosity is lowered by adding a chemically inert solvent. Both the monomer and the polymer are present in solution during the entire process. In many cases, heat removal is improved by simultaneous evaporative cooling induced by boiling off the solvent.

PRIMARY MIXING TASK

- Rapid axial exchange to achieve isothermal conditions

EMULSION POLYMERIZATION

In emulsion polymerization, the water-insoluble monomer is predispersed in an aqueous phase. In contrast to bead polymerization, the dispersion is not stabilised physically by turbulence, but chemically using emulsifiers. Polymerization does not take place in the dispersed monomer droplets, whose diameter is 10–1000 µm, but in the much smaller latex particles with diameters of about 0.3–0.8 µm. These contain both polymer and monomer molecules and are surrounded by emulsifier molecules that stabilise them against the aqueous phase. Owing to the small particle size, the heat of reaction can easily be dissipated into the aqueous phase. Heat transfer between the vessel wall and the aqueous phase is very good on account of the low viscosity of the emulsion and the high thermal conductivity of water.

PRIMARY MIXING TASKS

- Minimum shear
- Lowest possible power input to prevent coagulation
- Good heat transfer

SUSPENSION POLYMERIZATION

There are two different types of suspension polymerization:

- Pearl polymerization: neither the polymer nor the monomer are soluble in the carrier liquid so that polymerization takes place inside the monomer droplets (diameter 10–1000 µm).
- Precipitation polymerization: the monomer is dissolved in the carrier liquid, whereas the polymer is not soluble and thus precipitates during polymerization. Primary polymer particles usually have a diameter of approx. 1 µm. These particles agglomerate to porous secondary particles with a diameter of 100–200 µm. The solid particles have a tendency to stick together (coagulate) in certain polymerization phases and thus have to be separated again (dispersed) by shear forces in a flow field.

1. PEARL POLYMERIZATION

In pearl polymerization, the water-insoluble monomer is dispersed in an aqueous phase. The monomer droplets are formed in the shear field of the agitator and are stabilised by protective colloids. Because they keep their identity after dispersion, this is also known as a turbulence-stabilised dispersion.

PRIMARY MIXING TASKS

- Sufficiently high local energy dissipation by the impeller in conjunction with good axial exchange to obtain a narrow particle size distribution
- Control of heat removal
- Good surface entrainment, particularly with reflux cooling.

2. PRECIPITATION POLYMERIZATION

In precipitation polymerization, the starting materials are present as a homogeneous (organic) mixture. After addition of an initiator, the resulting polymers are insoluble in the monomer-containing carrier liquid and thus precipitate out of the continuous phase as primary particles with diameters that are often less than 1 µm.

If the polymer is also soluble, the monomer is usually diluted with large amounts of precipitating agent that dissolves the monomer so that the polymer precipitates. The primary particles may agglomerate to secondary particles, depending on the shear introduced by the agitator.

PRIMARY MIXING TASKS

- Dispersion of the added monomers
- High wall velocities to avoid deposits on the walls
- Heat removal

All polymerization methods have their specific advantages and disadvantages with differing degrees of importance in the individual reaction systems. For example, further processing of the reaction products of bulk and solvent polymerizations can be continued immediately. The other methods require more or less complicated workup steps (filtration, centrifuging, drying, etc.) if further processing of the resulting emulsions or suspensions (dispersions) cannot be continued immediately. The different polymerization methods are discussed below from the point of view of mixing technology and exemplified using typical products.

APPLICATION EXAMPLES

BULK POLYMERIZATION – PRODUCTION OF HIPS

Equipment to produce high-impact polystyrene (HIPS) generally consists of a cascade of 3–5 reactors, divided into pre-polymerization and post-polymerization stages. In the pre-polymerization stage, the target morphology and particle size are already essentially predefined. The reaction is generally carried out at 100–150 °C with yields of up to 15–30 %. During post-polymerization, the polymerization reaction is continued to give higher yields with correspondingly higher viscosities. Post-polymerization is usually carried out at temperatures of 140–190 °C.

In the reactor cascade, the heat of polymerization is removed by evaporating the styrene monomer. The gaseous monomer is then condensed on large-area condensers and fed back into the reactor. This type of heat removal requires good homogenization and good surface entrainment. For this reason, these reactors are often equipped with the Ekato Paravisc (Fig. 281).

Temperature homogeneity is the key variable influencing the molecular weight distribution and thus the attainable product quality. The temperature is adjusted for this type of reflux cooling by controlling the pressure and thus adjusting the boiling temperature of styrene.

SOLVENT POLYMERIZATION – PRODUCTION OF POLYBUTADIENE

Polybutadiene (butyl rubber) is used as a synthetic rubber, particularly for the treads of car tyres. It is almost exclusively produced by solution polymerization using Ziegler-Natta catalysts. Toluene is the most commonly used solvent.

The only technical mixing requirements for the reaction are good homogenization and axial flow to ensure rapid equalization of concentration and temperature gradients.

EMULSION POLYMERIZATION – PRODUCTION OF ABS

The synthesis of ABS (acrylonitrile-butadiene-styrene copolymer) is generally carried out in two steps. In the first step, the butadiene monomer undergoes emulsion polymerization to produce a polybutadiene dispersion (polybutadiene latex, PBL). This is then reacted in the second step with the styrene-acrylonitrile (SAN) copolymer in an emulsion to achieve the target rubber concentration.

Before continuing processing with styrene-acrylonitrile, it is important to adjust the particle size of the PBL dispersion to the desired value. Larger particles produce a greater impact toughness in the final product, but a lower surface gloss. The optimum size range of the PBL particles is approx. 0.3–0.5 µm.

Loading of the latex particles in the shear field of the agitator increases with increasing particle size. If the emulsifier envelope of two neighbouring particles is destroyed by high local shear introduced by an unsuitable agitator system, they will coagulate to even larger latex particles. This results in substantial changes to the mechanical

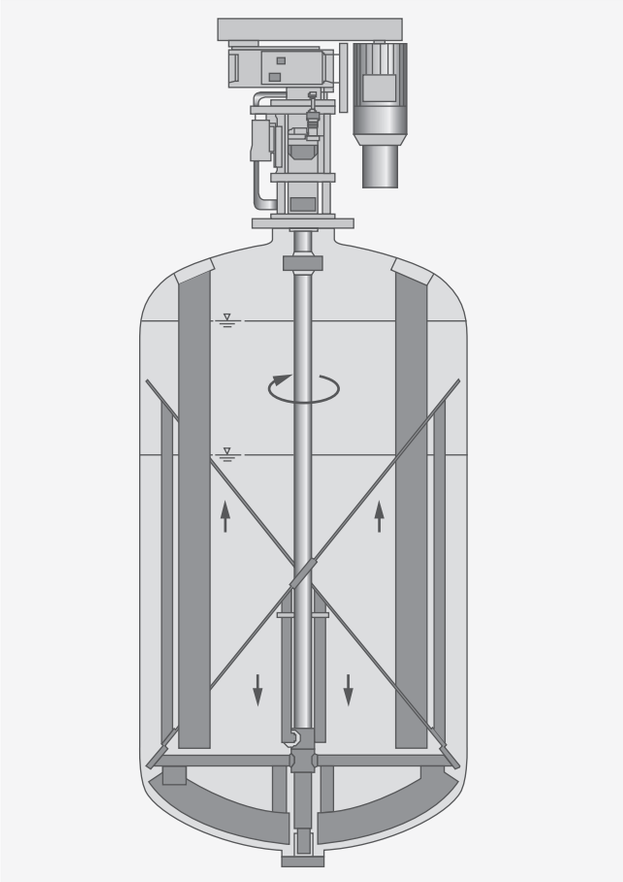

Fig. 281 HIPS reactor with Ekato Paravisc

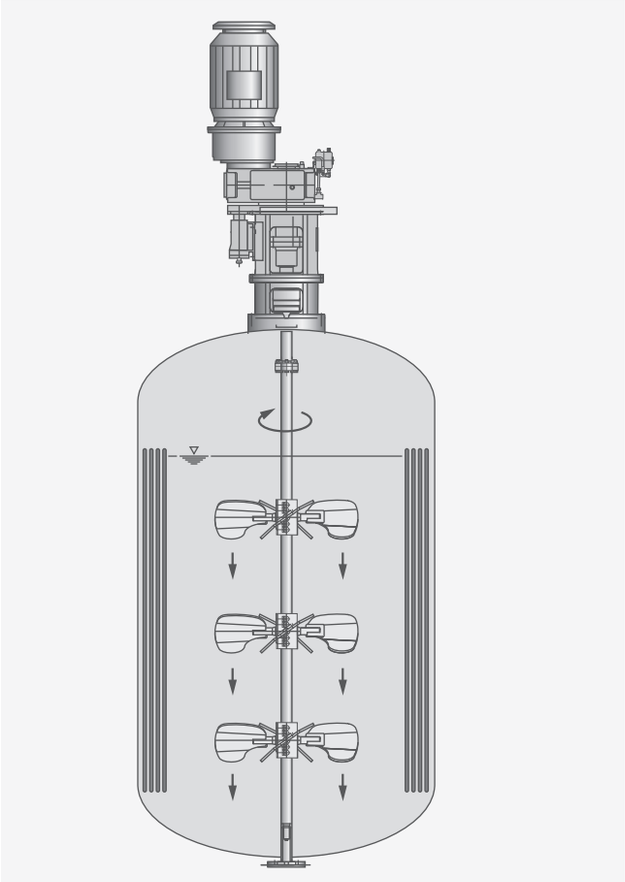

Fig. 282 Synthesis of ABS using a three-stage Ekato Isojet B for emulsion polymerization of PBL

properties of the end product. It also leads to the formation of thicker wall deposits that inhibit the dissipation of heat generated by the reaction. As a consequence, frequent cleaning cycles with considerable loss of productivity must be accepted.

The Ekato Isojet B, a very low shear impeller, is ideal for PBL reactors, particularly as a multi-stage version (Fig. 282). At the same time, using baffles as additional heat exchangers provides very efficient cooling.

PEARL POLYMERIZATION – PRODUCTION OF PVC

Some of the most common polymers, such as PVC, EPS and PMMA, are synthesised using pearl polymerization. Pearl polymerization is characterised by the monomer being present in an insoluble form at the start of polymerization. The monomer droplets are dispersed in the aqueous phase and act as "small water-cooled reactors".

Key parameters governing the product quality during pearl polymerization are the particle size distribution and often also the porosity of the end product – ideally, the material should be completely monodispersed. As a general rule, the material with the narrower particle size distribution is more attractive to the market.

This goal means demanding requirements for the mixing system:

- In the first step, the monomer must be dispersed as uniformly as possible in the water (narrow droplet size distribution)
- Even in large-scale reactors, the material should be produced as homogeneously as possible throughout the entire vessel (small temperature and concentration gradients)
- Accordingly, the formation of a separate monomer phase on the surface must be avoided (pooling)
- The resulting polymer beads must be suspended homogeneously

– The heat of reaction must be removed, either by evaporative cooling in conjunction with the corresponding condensers or via the vessel wall.

Pearl polymerization is generally carried out with simple, usually single-stage radial-pumping impellers. Particularly in tall vessels, however, their mixing efficiency is limited in the upper regions. The advantages of the Ekato Viscoprop agitator over these traditional mixing systems are discussed below.

By following the paths of the individual volume elements – in this case monomer droplets – on their way from the surface of the liquid into the depths of the polymerization vessel, surface entrainment can be significantly improved by choosing a two-stage, axial-pumping Viscoprop impeller.

The CFD simulation of the flow velocities for the Viscoprop system is given in Fig. 283. This simulation clearly shows that the flow currents near the agitator shaft and close to the impellers are fast and directed downwards in an axial direction. This is achieved by the optimised shape of the Viscoprop impellers and tailoring of the mixing system, including baffles, to the reaction vessel. Close to the reactor wall there is a corresponding flow profile directed upwards that provides high wall speeds. This lowers the risk of deposits forming because, in spite of its size and slender design, the reactor does not have any dead zones.

INFLUENCE ON THE PARTICLE SIZE DISTRIBUTION

After switching to the new Ekato mixing system, the reaction affords appreciably narrower particle size distributions. This is a direct consequence of the axial-pumping, multi-stage setup. As shown schematically in Fig. 284, radial-pumping systems are associated with the risk of extreme widening of the particle size distribution due to coagulation of droplets in zones at a distance from the agitator. In conventional mixing systems, it is even possible that a bimodal particle size distribution may develop.

Once the polymerization process has been tailored to the new mixing system, this Ekato solution provides a narrow distribution around the target particle size. It is possible to quickly achieve substantial improvements by varying the mixing system, type and quantity of protective colloid and power input in pilot tests, which already provide representative results at the 100 to 500 litre scale, and then transfer these to the production scale.

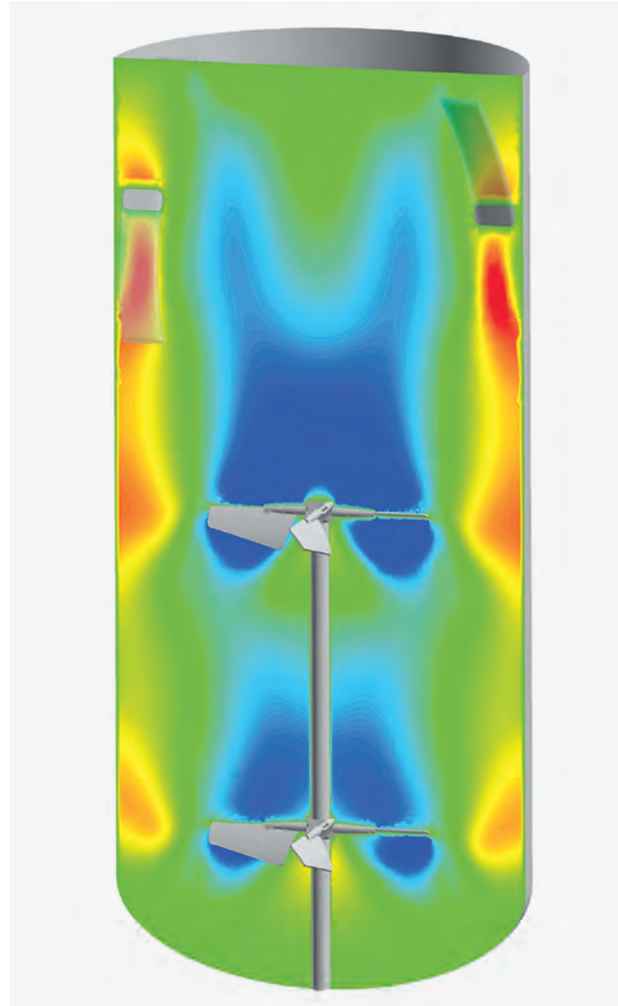

Fig. 283 CFD-simulated axial flow velocities in a PVC reactor

PRECIPITATION POLYMERIZATION – PRODUCTION OF HDPE

Precipitation polymerization of HDPE (high-density polyethylene) is carried out at low pressures in an autoclave. Unimodal HDPE is produced in parallel reactors, whereas bimodal HDPE is produced in series reactors (cascade).

Current reactors have a volume of up to 300 m^3 and capacities of up to 500 kt/a. The catalyst is prepared batchwise in a vessel, diluted in another vessel and then added to the reactor. The continuously operating reactor is also fed with monomer, hydrogen and hexane. The exothermic reaction takes place at a pressure of 5–10 bar and a temperature of 75–85 °C. Heat is removed with an external

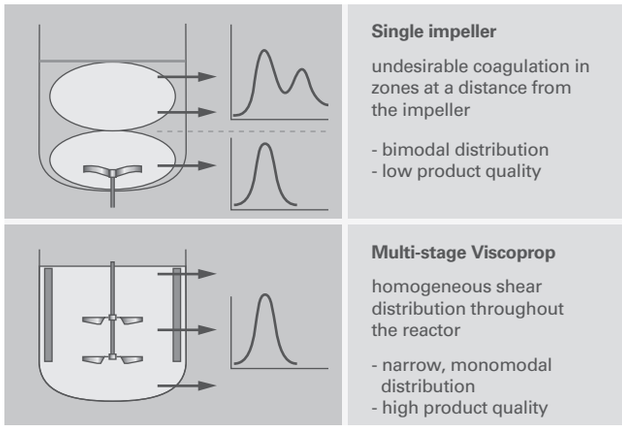

Fig. 284 Influence of a single-stage radial-pumping mixing system (top) and a multi-stage, axial-pumping mixing system (bottom) on the particle size distribution during pearl polymerization

heat exchanger. The molecular weight, molecular weight distribution and density of the product are controlled by adjusting the type and concentration of the catalyst and co-monomer as well as the quantity of hydrogen.

The processing chain ends with the post-reactor in which the monomer reaches a conversion rate of 99%. The resulting suspension is fed to a receiver and then centrifuged, dried in a fluidised bed with hot nitrogen and finally sieved. Stabilisers and additives are mixed in before it is extruded.

The tall shape of these polymerization reactors is due to the simple fact that their diameter is limited by road haulage. The mixing task is thus to achieve appropriate blend times for the particular size and shape of the vessel. In addition, high wall velocities must prevent scaling on the vessel walls.

Ekato developed the Isojet VDT concept to carry out these tasks efficiently (see also page 120 ff.). The flow mechanics induced by the multiple Isojet stages stacked on top of each other act as a virtual draft tube (VDT) that accelerates the downward axial flow. This allows extremely short blend times, even in very thin and tall vessels.

The special design of this mixing system quickly equalises any concentration or temperature gradients, thus leading to high product qualities. The flow pattern close to the walls shows correspondingly high upward flow velocities that prevent incrustations and deposits.

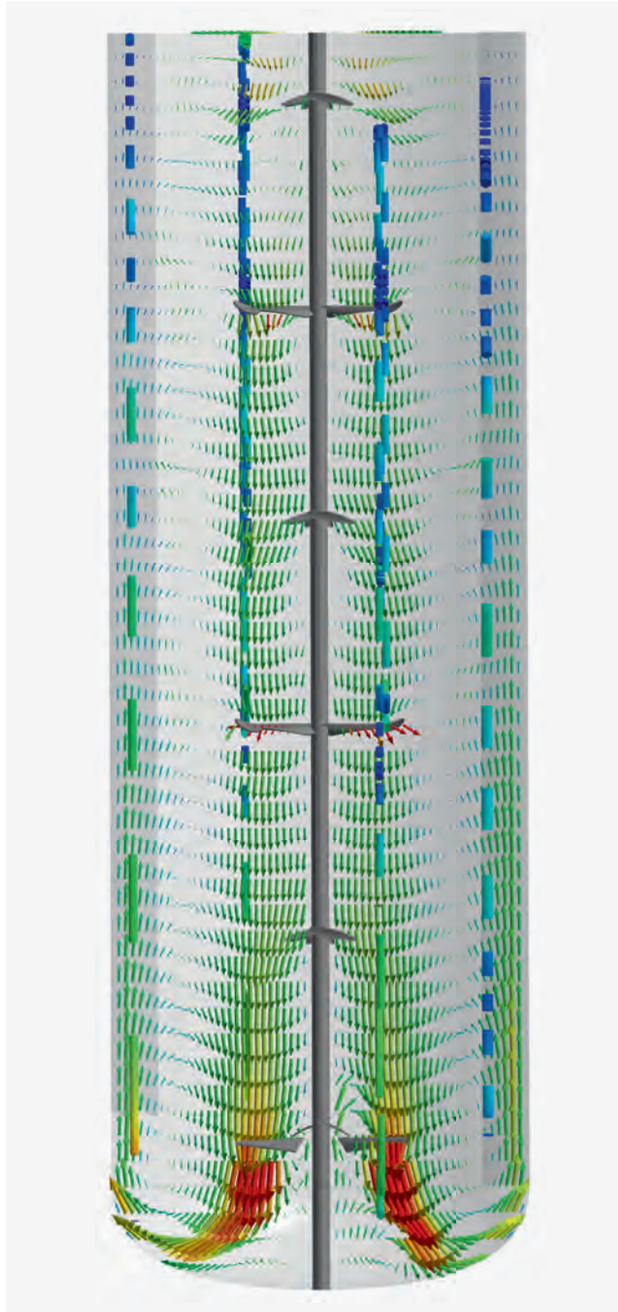

Fig. 285 HDPE reactor with Ekato Isojet VDT

ISBN 978-3-00-038660-2